Stewart®
FILMSCREEN

Projection Ports

Isolates projector noise, providing for a perfectly immersive experience!

KEY FEATURES & BENEFITS:

1. Special optical glass allows exceptional light and color transmission, isolating projector noise without affecting contrast or image fidelity
2. A true turnkey solution for when a projector needs to be isolated from the viewing environment for noise and/or acoustical purposes
3. Handmade with exceptional Stewart materials and available in custom sizes, in single or double pane glass versions

Projection Ports

Isolates projector noise, provides for a perfectly immersive experience!

A Stewart Projection Port is engineered to insulate the viewing environment from unwanted noise from the projector. The Projector Port's glass is specially formulated with low-iron content to provide exceptional light and color transmission properties. Stewart uses the highest quality materials to minimize lighting back-scatter, while delivering the best quality light output from the projector.

Each model is hand-made with heavy duty extruded aluminum and a durable anodized finish. Single and double pane-glass models are available. The unit comes fully assembled and is ready to be installed.

Stewart Projection Ports are the perfect noise reduction solution to go with the perfect image fidelity provided by your Stewart projection screen!

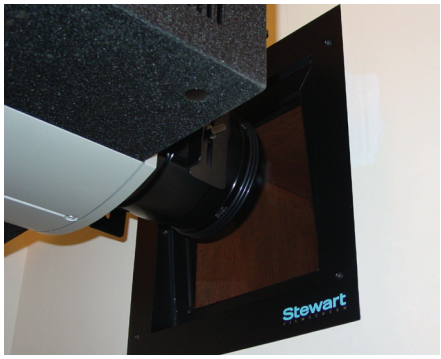

view from inside the projection room

Custom sizes available in single-pane and double-pane versions. Shown here in standard 9"x 9" double-pane configuration:

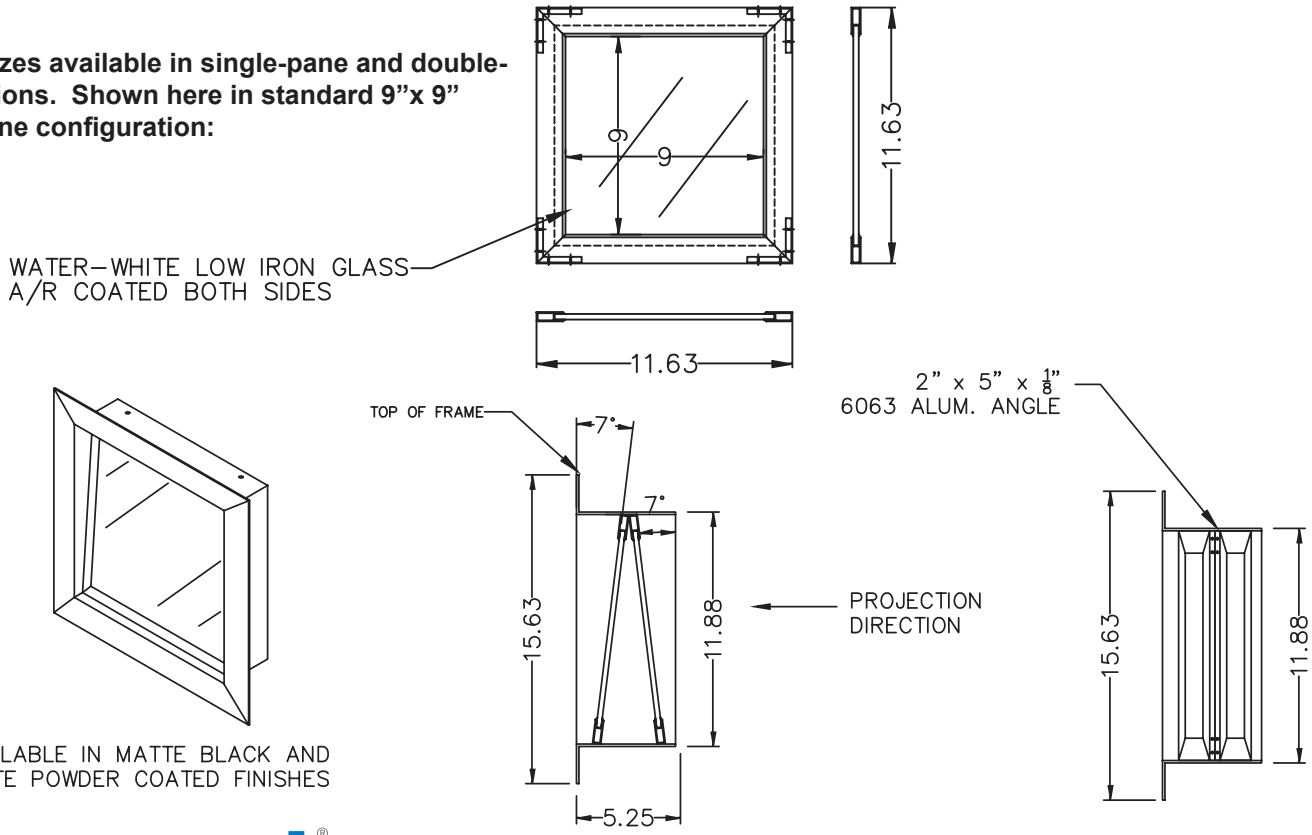

AVAILABLE IN MATTE BLACK AND MATTE WHITE POWDER COATED FINISHES

Stewart® FILMSCREEN

Find your local representative at www.stewartfilmscreen.com/reps

1161 Sepulveda Blvd Torrance CA 90502 USA 800.762.4999 | Tel: 310.784.5300 | Fax: 310.326.6870 | Email: request@stewartfilm.com | www.stewartfilmscreen.com
© Stewart Filmscreen Corporation, specifications are subject to change without notice.