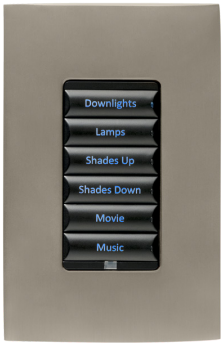

Keypad Bus Wiring Guide

Cable Specifications

The following cable types may be used for wiring the Control4® keypad bus:

- Control system cable, such as Belden 1502R or 1502P or Liberty Cable LLINX-U, that utilizes one 18-gauge pair for power and one 22- or 24-gauge twisted pair for data.

  NOTE: The use of CAT5e or CAT6 cable for bus wiring is no longer recommended. For installations that already have CAT5e/CAT6 cabling, see “CAT5e/CAT6 Installations” later in this guide.

Power Supply

C4-BPS48

- Use with the Configurable Wired Keypads and Wireless Keypads (C4-KCB, C4-SKCB, C4-KC120277, and C4-KC240).
- Use with the Bus Ethernet Gateway (C4-DIN-BEG).
- Mounts in the Control4 2-Slot or 5-Slot Panel separately from the rail and does not occupy a slot space.

Control4™

Wiring Topologies

The Control4 bus may be wired using one of two (2) topologies to install the wired or wireless keypads: star or daisy-chain. Each of these topologies provides two-to-three ways to wire the keypads; each topology limits the number of keypads allowed and the total bus cable length. The topology options are described and illustrated in the following sections.

Star Topology

The Control4 star topology wiring system (see Figure 1) is a cabling scheme in which all keypads connect to a central Bus Ethernet Gateway with a maximum of eight (8) spokes of no more than 10 keypads per spoke (do not home run each keypad).

Figure 1. Star Topology with Spokes

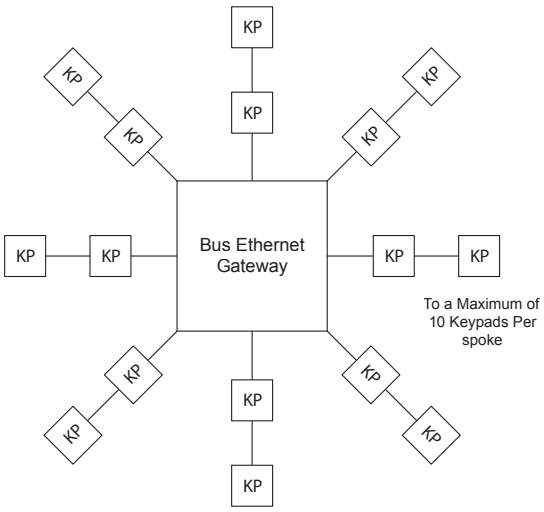

Star Topology with One Power Supply

Figure 2 on the next page illustrates a star topology with the Bus Ethernet Gateway and a single Bus Power Supply at the center of the spoke. Wiring with this topology results in a maximum cable length of 4,000 feet (1,219m) and a maximum of 40 keypads. Each spoke can be no more than 1,000 feet (304m).

IMPORTANT! Do not exceed 10 keypads per spoke or eight (8) spokes per gateway.

Figure 2. Single Power Supply in a Star Topology

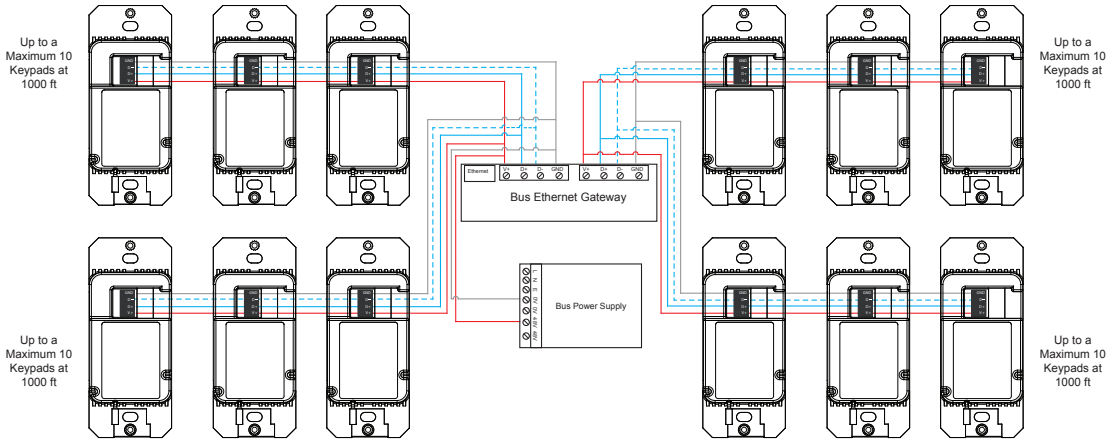

Star Topology with Two Power Supplies

Figure 3 illustrates a star topology with the Bus Ethernet Gateway and two (2) Bus Power Supplies at the center of each spoke. Wiring with this topology results in a maximum cable length of 4,000 feet (1,219m) and up to 80 keypads. Each spoke can be no more than 1,000 feet (304m).

IMPORTANT!

(1) Do not exceed 10 keypads per spoke or eight (8) spokes per Bus Ethernet Gateway.

(2) Only connect +48V from one of the two (2) Bus Power Supplies to the Bus Ethernet Gateway.

(3) Make sure the GND from both Bus Power Supplies connects to the GND on the Bus Ethernet Gateway.

Figure 3. Two Power Supplies in a Star Topology

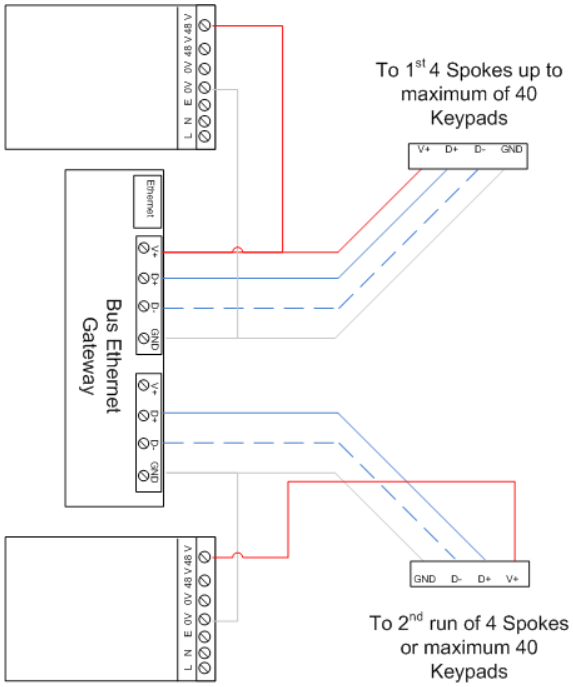

Daisy-Chain Topology

The Control4 daisy-chain topology wiring system is a cabling scheme in which the keypads and the Bus Ethernet Gateway are connected together in a single chain. The maximum number of keypads on the chain will depend upon the location of the Bus Ethernet Gateway and Bus Power Supply in the chain as well as the number of Bus Power Supplies installed.

Daisy-Chain Topology with Gateway and Single Power Supply at the Beginning of the Chain

Figure 4 illustrates a chain topology showing the Bus Ethernet Gateway and Bus Power Supply at the beginning of the chain. This topology allows for a maximum of 40 keypads and a maximum total bus length of 1,000 feet (304m).

Figure 4. Chain with Gateway and Power Supply at Beginning of Chain

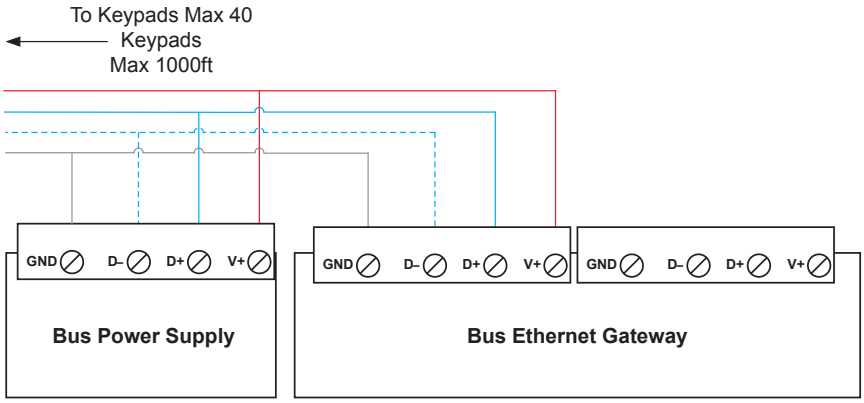

Daisy-Chain Topology with Gateway and Single Power Supply in the Middle of the Chain

Figure 5 illustrates a chain with the Bus Ethernet Gateway and Bus Power Supply centrally located between the chains. Wiring with this topology increases the maximum number of keypads and cable length to 50 keypads (25 maximum per chain) and 2,000 feet (600m) of cable on the bus (1,000 feet/300m maximum per chain).

Figure 5. Chain with Gateway and Power Supply in Middle of Chain

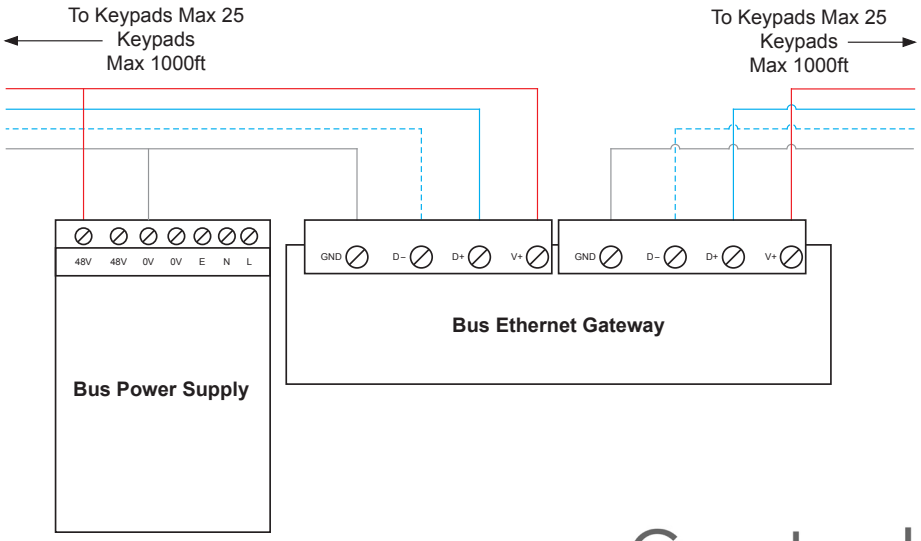

Daisy-Chain Topology with Gateway and Two Power Supplies in the Middle of the Chain

Figure 6 illustrates a chain with the Bus Ethernet Gateway and two (2) Bus Power Supplies centrally located between the chains. Wiring in this topology results in a maximum of 80 keypads (40 maximum in each direction) and 2,000 feet (600m) of cable on the bus (1,000 feet/300m in each direction).

IMPORTANT!

(1) Only connect +48V from one of the two (2) Bus Power Supplies to the Bus Ethernet Gateway.

(2) Make sure the GND from both Bus Power Supplies connects to the GND on the Bus Ethernet Gateway.

Figure 6. Chain with Gateway and Two Power Supplies in Middle of Chain

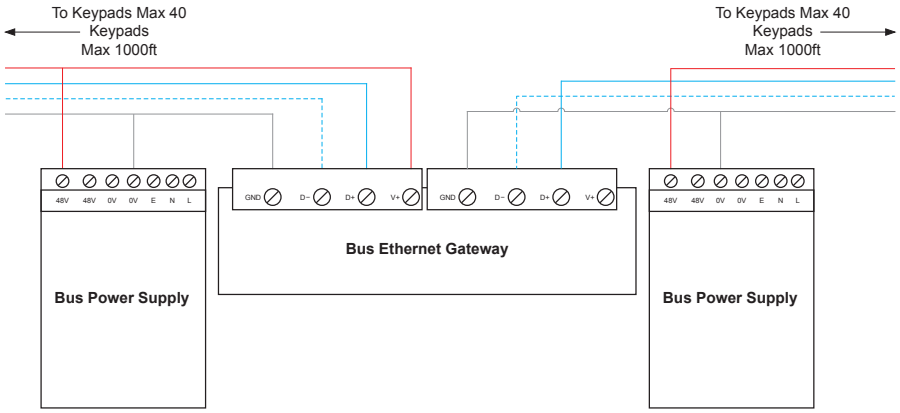

Mixing Wired and Wireless Keypads

In many instances, it may be desirable to mix both wired and wireless keypads in an installation in order to provide for a good ZigBee® mesh. We recommend using a wired keypad at the main entrance to each room in order to take advantage of the fallback capabilities. Additional keypads in the room can then be either wired or wireless as needed.

It is possible to power the wireless keypads using the same 48V Bus Power Supply that is being used to power the wired keypads.

When mixing wired and wireless keypads together in any of the above topologies, count each wireless keypad as the equivalent of 1.5 wired keypads when determining the total number of keypads that can be powered by a Bus Power Supply.

For example, a single power supply in the star topology could power up to 40 wired keypads OR a mixture of 20 wired keypads and 13 wireless keypads.

CAT5e/CAT6 Installations

As noted above, CAT5e and CAT6 are not recommended for new installations. For systems that were already pre-wired using CAT5e or CAT6, please carefully follow the wiring instructions below.

Terminal	Wire	Color
GND	3 x Wire	Orange White + Green White + Brown White
D+	1 x Wire	Blue
D-	1 x Wire	Blue White
+48/24VDC	3 x Wire	Orange + Green + Brown

The three (3) wires each for +48V and GND must be carefully twisted together to ensure a good connection and to prevent power issues along the bus.

1. Strip each wire approximately .75" (1.5cm), and then use a pair of pliers to tightly twist the wires together. Do not twist by hand.
2. Once the three (3) wires have been thoroughly twisted together, cut the twisted section down slightly to fit appropriately in the connector.